Reorder No. D09.08R

DYNABRADE®

D3 SANDER SERIES

DYNORBITAL® SUPREME

NEW DYNORBITAL® SILVER SUPREME

DYNORBITAL-SPIRIT®

THE FUTURE OF RANDOM ORBITAL SANDING IS NOW!

D3

RANDOM ORBITAL SANDER PROGRAM

Dynabrade soars into the future of Random Orbital Sanding technology with a visionary program of THREE top-quality tool designs! Encompassing the widest variety of palm-style Random Orbital Sanders in the world, Dynabrade's new "D3" Series offers unprecedented versatility to the workplace. Made with pride in the USA, each model addresses specific operator needs, allowing the perfect match for every application!

The choice is yours:

- **Dynorbital® Supreme**
- **NEW Dynorbital® Silver Supreme**
- **Dynorbital-Spirit®**

A UNIVERSE OF APPLICATIONS!

Furniture Fixtures and Moldings • Solid Surface Counter Tops • Custom Kitchen Cabinets • Custom Woodwork • Laminated Products • Metal Finishing Carbon Fiber • Fiberglass Mold Repair on Bath Tubs • Bronze Sculptures Unfinished Wood Products • P.O.P. Displays • Custom Guitars • Architectural Millwork • Finish Sand • Antique Restoration • Case Work • Finish Door and Window Frames • Auto Body Work • Sheet Metal Surface Prep Office Furniture • Hydraulic Tanks and Top Plates Aircraft Panels • Outdoor Signs • Upholstered Furniture White Sanding • Tables and Chairs • Utility Trucks Medical Equipment • Computer Frames • Food Industry Conveyors • Veneer Zinc Castings Window Shutters • Refinish Aircraft Windows Raised Panel Doors • Painted Parts Billiard Tables • Auto Bumper • Fabricated Metal Parts • Edge Sanding • Polish Steel Caps • Aluminum Furniture • Sand Primer Decorative Accessories • Surface Prep Fiberglass Boats • Home Appliances Satellite Antennas • MDF Components • Finish Custom Injection Moldings and Much More!

DYNABRADE® LIFETIME WARRANTY MADE IN USA

MADE IN USA

Dynorbital® Supreme

Setting the Standard for Random Orbital Supremacy!

- The cornerstone of the "D3" Series, Dynorbital® Supreme now sports a distinctive NEW look, signifying many innovations and improvements!
- "D3" advancements include refined ergonomic design, increased vacuum capabilities, aggressive 3/8" (10 mm) orbit and more.
- When operating on work surface, tool maintains highest RPM in the industry!

Dynorbital® Silver Supreme

Supreme Power Arrives in Lightweight Package!

- The NEW tool in our "D3" Series is the ultimate combination of Supreme power and lightweight comfort!
- "D3" innovations include all-steel components, ergonomic tool grip, outstanding vacuum capabilities and more.
- Steel cylinder and end plates stay perfectly aligned, to maximize motor performance!

Dynorbital-Spirit®

Light-to-Medium Duty Sander with Dynabrade Quality Built In!

- Dynabrade's lightest Random Orbital Sander is ideal for vertical and contoured applications, and for operators with smaller hands.
- "D3" improvements include distinctive NEW look, ergonomic tool grip for added comfort, increased vacuum efficiency and new muffler design.
- For light-to-medium duty customers who demand the Dynabrade Difference!

Dynorbital® Supreme

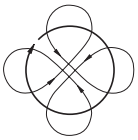

NEW! 3/8"
(10 mm)
Diameter Orbit

For Aggressive Sanding

*Look for **ORANGE** Throttle Lever*

3/16"
(5 mm)
Diameter Orbit

For General Sanding

*Look for **SILVER** Throttle Lever*

3/32"
(2 mm)
Diameter Orbit

For Ultra-Fine Sanding

*Look for **BLACK** Throttle Lever*

Non-Vacuum

- Includes low profile, premium urethane weight-mated sanding pad.
- Optional vacuum conversion kits available, to easily convert non-vacuum tool to self-generated vacuum tool or central vacuum tool (see page 11).

NEW!

Pad Diameter Inch (mm)	3/8" Orbit Models	3/16" Orbit Models	3/32" Orbit Models
3-1/2 (89 mm)	56870	56800	56840
5 (127 mm)	56880	56815	56850
6 (152 mm)	56890	56826	56859

Tune-Up Kit: No. 96024

Model 56815

See page 12 for NEW ORANGE Sanding Pads!

Self-Generated Vacuum

- Includes low profile, premium urethane weight-mated sanding pad.
- Ready for connection to optional portable self-contained dust collection system.

NEW!

Pad Diameter Inch (mm)	3/8" Orbit Models	3/16" Orbit Models	3/32" Orbit Models
3-1/2 (89 mm)	56873	56803	56843
5 (127 mm)	56883	56818	56853
6 (152 mm)	56893	56829	56862

Tune-Up Kit: No. 96024

Model 56818

Portable Dust Collection System (Optional - See Page 16)

Central Vacuum

- Includes low profile, premium urethane weight-mated sanding pad.
- Has 1" outside diameter vacuum port, for easy connection to central vacuum system.

NEW!

Pad Diameter Inch (mm)	3/8" Orbit Models	3/16" Orbit Models	3/32" Orbit Models
3-1/2 (89 mm)	56874	56804	56844
5 (127 mm)	56884	56819	56854
6 (152 mm)	56894	56830	56863

Tune-Up Kit: No. 96024

Model 56819

See page 10 for complete specifications of each Dynorbital® Supreme model.

D3 Supreme Innovations!

The BEST Keeps Getting Better – Dynorbital® Supreme Now Offers "D3" Innovations!

***NEW!* Refined Ergonomic Tool Grip**
Allows more comfortable grip and feel, reducing operator fatigue and increasing efficiency.

Auto-Recess Throttle Lever
Lever recesses into housing grip when depressed, eliminating pressure-point on operator's palm. Lever is color-coded to identify tool orbit (see page 4).

Comfort Platform
(U.S. Patent No. D610,428)
Provides additional hand and wrist support, enhancing operator comfort. Also offers protection against cold air exhaust.

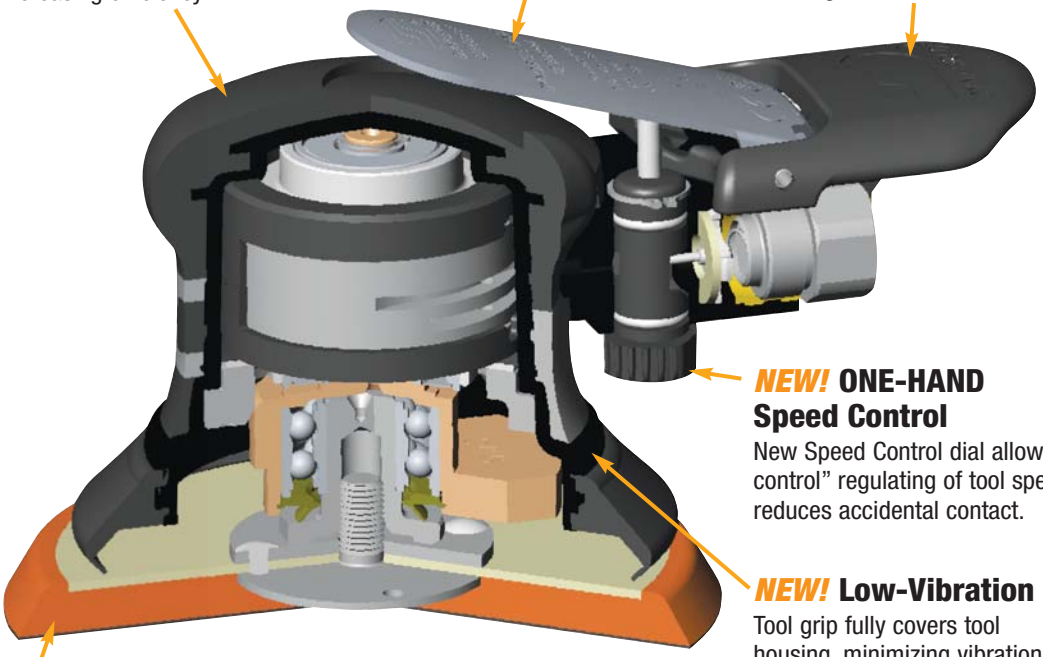

***NEW!* ONE-HAND Speed Control**
New Speed Control dial allows "thumb control" regulating of tool speed. Also reduces accidental contact.

***NEW!* Low-Vibration Design**
Tool grip fully covers tool housing, minimizing vibration transfer to operator.

Perfectly Balanced Sanding Pad
Ask for the ORANGE!
Perfectly-balanced, weight-mated sanding pad with exclusive **single-piece hub design**. Dynabrade premium urethane pads offer smoother operating performance and minimal vibration.

3-1/2" (89 mm) – 80 grams • 5" (127 mm) – 100 grams • 6" (152 mm) – 130 grams

***NEW!* "Stays-Tight" Threaded Muffler**
Muffler cap is now threaded, to remain firmly attached to tool during use.

***NEW!* 3/8" (10 mm) Orbit**
Expanded offering now includes 3/8" dia. orbit models, ideal for heavy stock removal.

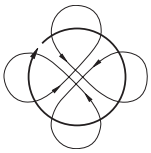

***NEW!* Enhanced Vacuum Capabilities**
Vacuum port diameter is increased by **110%**, allowing maximum capture of dust and debris!

5" (127 mm) Dia. Vacuum Shroud shown.

Patented Bearing Protection
"V-Seal" bearing seal protects balancer shaft bearing from sanding residue, resulting in longer tool life.

DYNORBITAL® SUPREME

Dynorbital® Silver Supreme

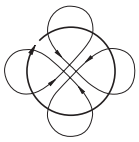

3/8"
(10 mm)
Diameter Orbit

For Aggressive Sanding

*Look for **ORANGE** Throttle Lever*

3/16"
(5 mm)
Diameter Orbit

For General Sanding

*Look for **GREY** Throttle Lever*

3/32"
(2 mm)
Diameter Orbit

For Ultra-Fine Sanding

*Look for **BLACK** Throttle Lever*

Non-Vacuum

NEW!

- Includes low profile, premium urethane weight-mated sanding pad.
- Optional vacuum conversion kits available, to easily convert non-vacuum tool to self-generated or central vacuum tool (see page 11).

Pad Diameter Inch (mm)	3/8" Orbit Models	3/16" Orbit Models	3/32" Orbit Models
3 (76 mm)	69100	69105	69110
3-1/2 (89 mm)	69000	69015	69030
5 (127 mm)	69005	69020	69035
6 (152 mm)	69010	69025	69040

Tune-Up Kit: No. 96620

Model 69020

See page 12 for NEW ORANGE Sanding Pads!

Self-Generated Vacuum

NEW!

- Includes low profile, premium urethane weight-mated sanding pad.
- Ready for connection to optional portable self-contained dust collection system.

Pad Diameter Inch (mm)	3/8" Orbit Models	3/16" Orbit Models	3/32" Orbit Models
3 (76 mm)	69103	69108	69113
3-1/2 (89 mm)	69003	69018	69033
5 (127 mm)	69008	69023	69038
6 (152 mm)	69013	69028	69043

Tune-Up Kit: No. 96620

Model 69023

Portable Dust Collection System (Optional - See Page 16)

Central Vacuum

NEW!

- Includes low profile, premium urethane weight-mated sanding pad.
- Has 1" outside diameter vacuum port, for easy connection to central vacuum system.

Pad Diameter Inch (mm)	3/8" Orbit Models	3/16" Orbit Models	3/32" Orbit Models
3 (76 mm)	69104	69109	69114
3-1/2 (89 mm)	69004	69019	69034
5 (127 mm)	69009	69024	69039
6 (152 mm)	69014	69029	69044

Tune-Up Kit: No. 96620

Model 69024

See page 10 for complete specifications of each Dynorbital® Silver Supreme model.

Dynorbital® Silver Supreme

The Most DURABLE Random Orbital Sander Ever Built! Combines Supreme Power with Lightweight Comfort!

Compact Grip Size
Compact, ergonomic design is ideal for operators with smaller hands.

Auto-Recess Throttle Lever
Lever recesses into housing grip when depressed, eliminating pressure-point on operator's palm. Lever is made from composite material to insulate against cold air. Lever is color-coded to identify tool orbit (see page 6).

Comfort Platform
(U.S. Patent No. D610,428)
Provides additional hand and wrist support, enhancing operator comfort. Also offers protection against cold air exhaust.

Single-Piece Locking Ring
Allows easier assembly and provides tighter seal.

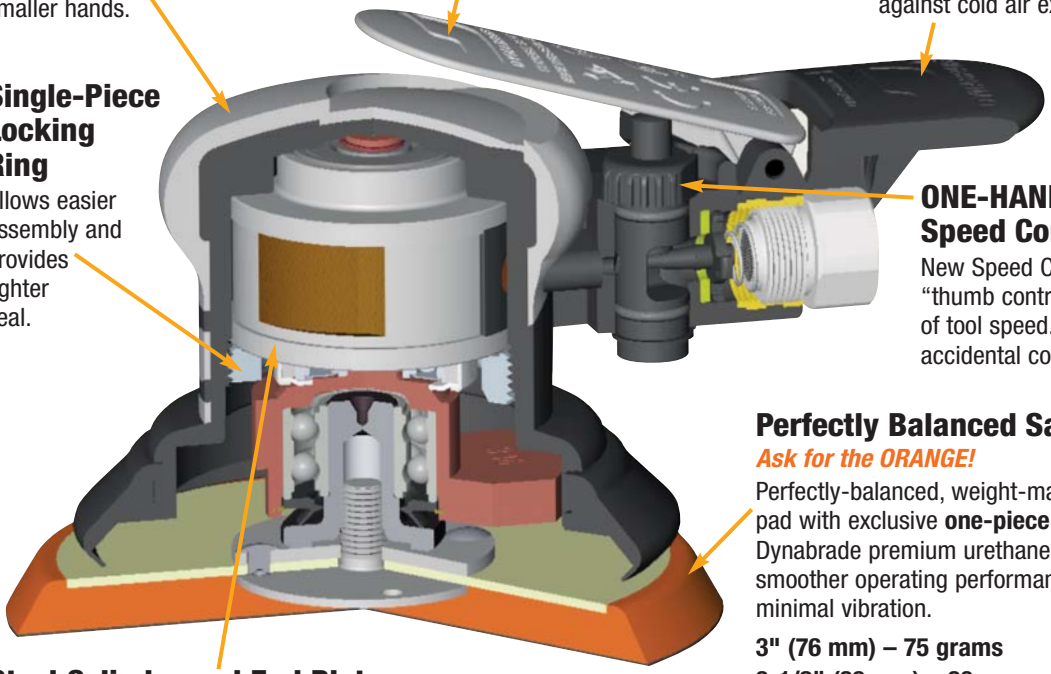

ONE-HAND Speed Control
New Speed Control dial allows "thumb control" regulating of tool speed. Also reduces accidental contact.

Perfectly Balanced Sanding Pad
Ask for the ORANGE!
Perfectly-balanced, weight-mated sanding pad with exclusive **one-piece hub design**. Dynabrade premium urethane pads offer smoother operating performance and minimal vibration.

3" (76 mm) – 75 grams
3-1/2" (89 mm) – 80 grams
5" (127 mm) – 100 grams
6" (152 mm) – 130 grams

Steel Cylinder and End Plates
Steel cylinder and end plates stay perfectly aligned. Design of end plates keeps more air in cylinder, increasing motor efficiency!

NEW! Enhanced Vacuum Capabilities
Vacuum port diameter is increased by **110%**, allowing maximum capture of dust and debris!

3" (76 mm) Dia. Vacuum Shroud shown.

"Stays-Tight" Threaded Muffler
Muffler cap is now threaded, to remain firmly attached to tool during use.

LIGHTWEIGHT Design
Tool weighs only **1.8 lbs (.8 kg)!** Combines optimum comfort with heavyweight power!

Patented Bearing Protection
"V-Seal" bearing seal protects balancer shaft bearing from sanding residue, resulting in longer tool life.

"Top Hat" Seal
Protects front motor bearing from sanding residue, and holds in bearing lubrication while keeping out contaminants.

Dynorbital-Spirit®

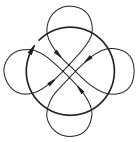

3/8"
(10 mm)
Diameter Orbit

For Aggressive Sanding

*Look for **ORANGE** Throttle Lever*

3/16"
(5 mm)
Diameter Orbit

For General Sanding

*Look for **GREY** Throttle Lever*

3/32"
(2 mm)
Diameter Orbit

For Ultra-Fine Sanding

*Look for **BLACK** Throttle Lever*

Non-Vacuum

- Includes low profile, premium urethane weight-mated sanding pad.
- Optional vacuum conversion kits available, to easily convert non-vacuum tool to self-generated or central vacuum tool (see page 11).

Pad Diameter Inch (mm)	3/8" Orbit Models	3/16" Orbit Models	3/32" Orbit Models
3 (76 mm)	59100	59105	59110
3-1/2 (89 mm)	59000	59015	59030
5 (127 mm)	59005	59020	59035
6 (152 mm)	59010	59025	59040

Tune-Up Kit: No. 96510

Model 59020

See page 12 for NEW ORANGE Sanding Pads!

Self-Generated Vacuum

- Includes low profile, premium urethane weight-mated sanding pad.
- Model 58054 includes 56320 Pad for Mesh Abrasives (see page 12, 15).
- Ready for connection to optional portable self-contained dust collection system.

Pad Diameter Inch (mm)	3/8" Orbit Models	3/16" Orbit Models	3/32" Orbit Models
3 (76 mm)	59103	59108	59113
3-1/2 (89 mm)	59003	59018	59033
5 (127 mm)	59008	59023/58054	59038
6 (152 mm)	59013	59028	59043

Tune-Up Kit: No. 96510

Model 59023

Portable Dust Collection System
(Optional - See Page 16)

Central Vacuum

- Includes low profile, premium urethane weight-mated sanding pad.
- Has 1" outside diameter vacuum port, for easy connection to central vacuum system.

Pad Diameter Inch (mm)	3/8" Orbit Models	3/16" Orbit Models	3/32" Orbit Models
3 (76 mm)	59104	59109	59114
3-1/2 (89 mm)	59004	59019	59034
5 (127 mm)	59009	59024	59039
6 (152 mm)	59014	59029	59044

Tune-Up Kit: No. 96510

Model 59024

See page 11 for complete specifications of each Dynorbital-Spirit® model.

D3 Dynorbital-Spirit®

Light-to-Medium Duty Sander Offers "D3" Advantages!

NEW! Compact Grip Size
Compact, ergonomic design has been reduced in size by **5%.** Ideal for operators with smaller hands, and for use in vertical applications!

NEW! Single-Piece Locking Ring
Allows easier assembly and provides tighter seal.

Perfectly Balanced Sanding Pad
Ask for the ORANGE!

Perfectly-balanced, weight-mated sanding pad with exclusive **one-piece hub design**. Dynabrade premium urethane pads offer smoother operating performance and minimal vibration.

3" (76 mm) – 75 grams
3-1/2" (89 mm) – 80 grams
5" (127 mm) – 100 grams
6" (152 mm) – 130 grams

Auto-Recess Throttle Lever
Lever recesses into housing grip when depressed, eliminating pressure-point on operator's palm. Lever is made from composite material to insulate against cold air. Lever is color-coded to identify tool orbit (see page 8).

Comfort Platform
(U.S. Patent No. D610,428)

Provides additional hand and wrist support, enhancing operator comfort. Also offers protection against cold air exhaust.

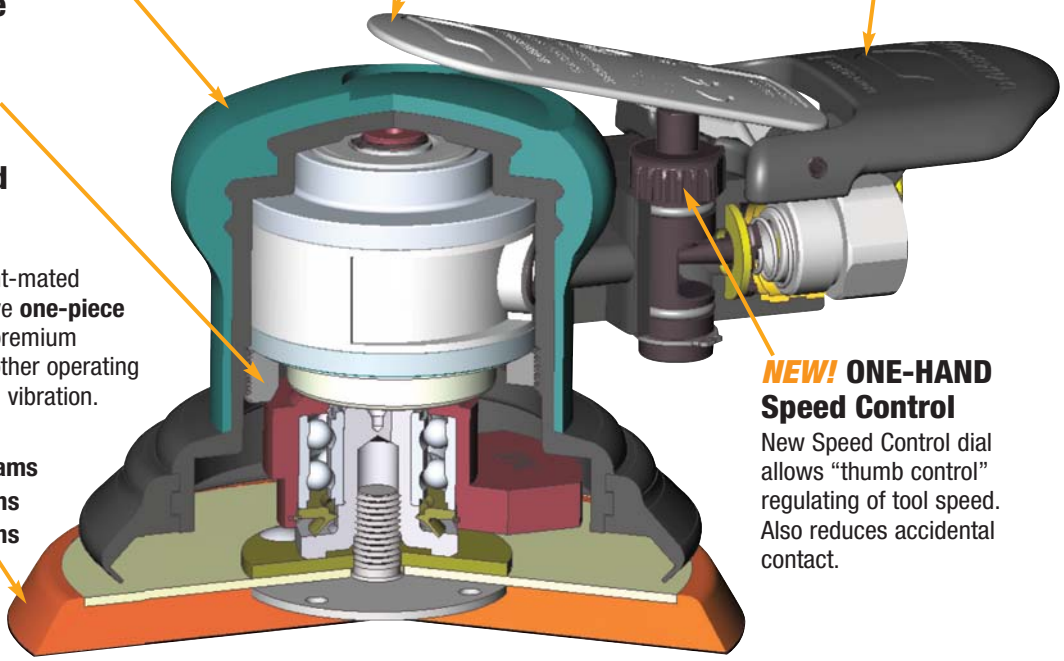

NEW! ONE-HAND Speed Control
New Speed Control dial allows "thumb control" regulating of tool speed. Also reduces accidental contact.

NEW! Enhanced Vacuum Capabilities
Vacuum port diameter is increased by **110%**, allowing maximum capture of dust and debris!

5" (127 mm) Dia. Vacuum Shroud shown.

NEW! "Stays-Tight" Threaded Muffler
Muffler cap is now threaded, to remain firmly attached to tool during use.

Patented Bearing Protection
"V-Seal" bearing seal protects balancer shaft bearing from sanding residue, resulting in longer tool life.

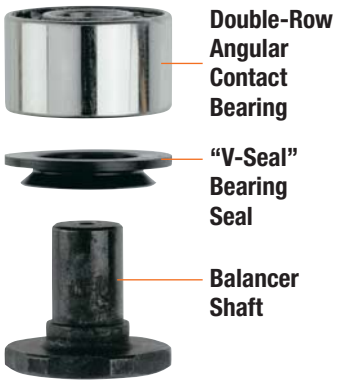

"Top Hat" Seal
Protects front motor bearing from sanding residue, and holds in bearing lubrication while keeping out contaminants.

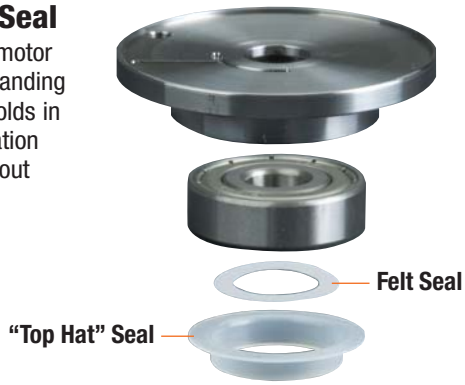

Specification Charts

Dynorbital® Supreme Models *(Pages 4-5)*

Model Number	Vacuum Style	Tool Dia. Inch (mm)	Dia. Orbit Inch (mm)	Sound Level	Weight Pound (kg)	Length Inch (mm)
56800	Non-Vac	3-1/2 (89)	3/16 (5)	77 dB(A)	2.1 (1)	6 (152)
56815	Non-Vac	5 (127)	3/16 (5)	80 dB(A)	2.1 (1)	6-1/2 (165)
56826	Non-Vac	6 (152)	3/16 (5)	78 dB(A)	2.2 (1)	7 (178)
56840	Non-Vac	3-1/2 (89)	3/32 (2.5)	76 dB(A)	2.1 (1)	6 (152)
56850	Non-Vac	5 (127)	3/32 (2.5)	77 dB(A)	2.1 (1)	6-1/2 (165)
56859	Non-Vac	6 (152)	3/32 (2.5)	76 dB(A)	2.2 (1)	7 (178)
56870	Non-Vac	3-1/2 (89)	3/8 (10)	80 dB(A)	2.2 (1)	6 (152)
56880	Non-Vac	5 (127)	3/8 (10)	78 dB(A)	2.3 (1)	6-1/2 (165)
56890	Non-Vac	6 (152)	3/8 (10)	80 dB(A)	2.4 (1)	7 (178)
56803	Self-Gen	3-1/2 (89)	3/16 (5)	84 dB(A)	2.1 (1)	8-1/4 (210)
56818	Self-Gen	5 (127)	3/16 (5)	82 dB(A)	2.1 (1)	8-1/2 (216)
56829	Self-Gen	6 (152)	3/16 (5)	85 dB(A)	2.3 (1)	9 (229)
56843	Self-Gen	3-1/2 (89)	3/32 (2.5)	81 dB(A)	2.1 (1)	8-1/4 (210)
56853	Self-Gen	5 (127)	3/32 (2.5)	83 dB(A)	2.1 (1)	8-1/2 (216)

Model Number	Vacuum Style	Tool Dia. Inch (mm)	Dia. Orbit Inch (mm)	Sound Level	Weight Pound (kg)	Length Inch (mm)
56862	Self-Gen	6 (152)	3/32 (2.5)	84 dB(A)	2.3 (1)	9 (229)
56873	Self-Gen	3-1/2 (89)	3/8 (10)	84 dB(A)	2.3 (1)	8-1/4 (210)
56883	Self-Gen	5 (127)	3/8 (10)	85 dB(A)	2.3 (1)	8-1/2 (216)
56893	Self-Gen	6 (152)	3/8 (10)	85 dB(A)	2.5 (1.1)	9 (229)
56804	Central	3-1/2 (89)	3/16 (5)	79 dB(A)	2.1 (1)	7 (178)
56819	Central	5 (127)	3/16 (5)	80 dB(A)	2.2 (1)	7-1/4 (184)
56830	Central	6 (152)	3/16 (5)	81 dB(A)	2.3 (1)	7-3/4 (197)
56844	Central	3-1/2 (89)	3/32 (2.5)	79 dB(A)	2.1 (1)	7 (178)
56854	Central	5 (127)	3/32 (2.5)	80 dB(A)	2.2 (1)	7-1/4 (184)
56863	Central	6 (152)	3/32 (2.5)	79 dB(A)	2.3 (1)	7-3/4 (197)
56874	Central	3-1/2 (89)	3/8 (10)	80 dB(A)	2.3 (1)	7 (178)
56884	Central	5 (127)	3/8 (10)	81 dB(A)	2.3 (1)	7-1/4 (184)
56894	Central	6 (152)	3/8 (10)	84 dB(A)	2.4 (1)	7-3/4 (197)

Additional Specifications: Motor .28 hp (209 W) • Motor 12,000 RPM • Pad Thread 5/16"-24 Male • Air Inlet Thread 1/4" NPT
Hose I.D. Size 1/4" (6 mm) • Air Flow Rate 18 SCFM/510 L/Min • Height 3-1/2" (89 mm) • Air Pressure 90 PSIG (6.2 Bar)
Sound Level is the pressure measurement according to the method outlined in ISO regulation ISO-15744

NEW! Dynorbital® Silver Supreme Models *(Pages 6-7)*

Model Number	Vacuum Style	Tool Dia. Inch (mm)	Dia. Orbit Inch (mm)	Sound Level	Weight Pound (kg)	Length Inch (mm)
69000	Non-Vac	3-1/2 (89)	3/8 (10)	76 dB(A)	1.8 (.8)	6 (152)
69005	Non-Vac	5 (127)	3/8 (10)	80 dB(A)	1.9 (.9)	6-1/2 (165)
69010	Non-Vac	6 (152)	3/8 (10)	83 dB(A)	1.9 (.9)	7 (178)
69015	Non-Vac	3-1/2 (89)	3/16 (5)	77 dB(A)	1.7 (.8)	6 (152)
69020	Non-Vac	5 (127)	3/16 (5)	77 dB(A)	1.8 (.8)	6-1/2 (165)
69025	Non-Vac	6 (152)	3/16 (5)	77 dB(A)	1.8 (.8)	7 (178)
69030	Non-Vac	3-1/2 (89)	3/32 (2.5)	75 dB(A)	1.7 (.8)	6 (152)
69035	Non-Vac	5 (127)	3/32 (2.5)	78 dB(A)	1.7 (.8)	6-1/2 (165)
69040	Non-Vac	6 (152)	3/32 (2.5)	78 dB(A)	1.8 (.8)	7 (178)
69100	Non-Vac	3 (76)	3/8 (10)	80 dB(A)	1.8 (.8)	6 (152)
69105	Non-Vac	3 (76)	3/16 (5)	80 dB(A)	1.7 (.8)	6-1/2 (165)
69110	Non-Vac	3 (76)	3/32 (2.5)	80 dB(A)	1.7 (.8)	7 (178)
69003	Self-Gen	3-1/2 (89)	3/8 (10)	84 dB(A)	1.9 (.9)	8-1/2 (216)
69008	Self-Gen	5 (127)	3/8 (10)	80 dB(A)	2.0 (.9)	8-1/2 (216)
69013	Self-Gen	6 (152)	3/8 (10)	80 dB(A)	2.1 (.9)	9 (229)
69018	Self-Gen	3-1/2 (89)	3/16 (5)	79 dB(A)	1.8 (.8)	8-1/2 (216)
69023	Self-Gen	5 (127)	3/16 (5)	81 dB(A)	1.9 (.9)	8-1/2 (216)
69028	Self-Gen	6 (152)	3/16 (5)	84 dB(A)	2.0 (.9)	9 (229)

Model Number	Vacuum Style	Tool Dia. Inch (mm)	Dia. Orbit Inch (mm)	Sound Level	Weight Pound (kg)	Length Inch (mm)
69033	Self-Gen	3-1/2 (89)	3/32 (2.5)	84 dB(A)	1.8 (.8)	8-1/2 (216)
69038	Self-Gen	5 (127)	3/32 (2.5)	84 dB(A)	1.9 (.9)	8-1/2 (216)
69043	Self-Gen	6 (152)	3/32 (2.5)	81 dB(A)	2.0 (.9)	9 (229)
69103	Self-Gen	3 (76)	3/8 (10)	81 dB(A)	1.9 (.9)	8-1/2 (216)
69108	Self-Gen	3 (76)	3/16 (5)	79 dB(A)	1.8 (.8)	8-1/2 (216)
69113	Self-Gen	3 (76)	3/32 (2.5)	83 dB(A)	1.8 (.8)	9 (229)
69004	Central	3-1/2 (89)	3/8 (10)	79 dB(A)	1.9 (.9)	7 (178)
69009	Central	5 (127)	3/8 (10)	80 dB(A)	2.0 (.9)	7-1/4 (184)
69014	Central	6 (152)	3/8 (10)	84 dB(A)	1.9 (.9)	7-3/4 (197)
69019	Central	3-1/2 (89)	3/16 (5)	83 dB(A)	1.8 (.8)	7 (178)
69024	Central	5 (127)	3/16 (5)	79 dB(A)	1.9 (.9)	7-1/4 (184)
69029	Central	6 (152)	3/16 (5)	83 dB(A)	2.0 (.9)	7-3/4 (197)
69034	Central	3-1/2 (89)	3/32 (2.5)	82 dB(A)	1.8 (.8)	7 (178)
69039	Central	5 (127)	3/32 (2.5)	81 dB(A)	1.8 (.8)	7-1/4 (184)
69044	Central	6 (152)	3/32 (2.5)	82 dB(A)	2.0 (.9)	7-3/4 (197)
69104	Central	3 (76)	3/8 (10)	82 dB(A)	1.9 (.9)	7 (178)
69109	Central	3 (76)	3/16 (5)	80 dB(A)	1.8 (.8)	7-1/4 (184)
69114	Central	3 (76)	3/32 (2.5)	82 dB(A)	1.8 (.8)	7-3/4 (197)

Additional Specifications: Motor .26 hp (194 W) • Motor 12,000 RPM • Pad Thread 5/16"-24 Male • Air Inlet Thread 1/4" NPT
Hose I.D. Size 1/4" (6 mm) • Air Flow Rate 16 SCFM/450 L/Min • Height 3-1/2" (89 mm) • Air Pressure 90 PSIG (6.2 Bar)
Sound Level is the pressure measurement according to the method outlined in ISO regulation ISO-15744

D3 Specification Charts

Dynorbital-Spirit® Models *(Pages 8-9)*

Model Number	Vacuum Style	Tool Dia. Inch (mm)	Dia. Orbit Inch (mm)	Sound Level	Weight Pound (kg)	Length Inch (mm)
59000	Non-Vac	3-1/2 (89)	3/8 (10)	79 dB(A)	1.4 (.6)	6 (152)
59005	Non-Vac	5 (127)	3/8 (10)	82 dB(A)	1.5 (.7)	6-1/2 (165)
59010	Non-Vac	6 (152)	3/8 (10)	82 dB(A)	1.6 (.7)	7 (178)
59015	Non-Vac	3-1/2 (89)	3/16 (5)	81 dB(A)	1.4 (.6)	6 (152)
59020	Non-Vac	5 (127)	3/16 (5)	80 dB(A)	1.4 (.6)	6-1/2 (165)
59025	Non-Vac	6 (152)	3/16 (5)	81 dB(A)	1.5 (.7)	7 (178)
59030	Non-Vac	3-1/2 (89)	3/32 (2.5)	81 dB(A)	1.4 (.6)	6 (152)
59035	Non-Vac	5 (127)	3/32 (2.5)	80 dB(A)	1.4 (.6)	6-1/2 (165)
59040	Non-Vac	6 (152)	3/32 (2.5)	81 dB(A)	1.5 (.6)	7 (178)
59100	Non-Vac	3 (76)	3/8 (10)	79 dB(A)	1.4 (.6)	6 (152)
59105	Non-Vac	3 (76)	3/16 (5)	81 dB(A)	1.4 (.6)	6-1/2 (165)
59110	Non-Vac	3 (76)	3/32 (2.5)	79 dB(A)	1.3 (.6)	7 (178)
59003	Self-Gen	3-1/2 (89)	3/8 (10)	88 dB(A)	1.5 (.7)	8-1/2 (216)
59008	Self-Gen	5 (127)	3/8 (10)	87 dB(A)	1.6 (.7)	8-1/2 (216)
59013	Self-Gen	6 (152)	3/8 (10)	87 dB(A)	1.7 (.7)	9 (229)
59018	Self-Gen	3-1/2 (89)	3/16 (5)	89 dB(A)	1.4 (.6)	8-1/2 (216)
59023	Self-Gen	5 (127)	3/16 (5)	86 dB(A)	1.5 (.7)	8-1/2 (216)
59028	Self-Gen	6 (152)	3/16 (5)	87 dB(A)	1.6 (.7)	9 (229)

Model Number	Vacuum Style	Tool Dia. Inch (mm)	Dia. Orbit Inch (mm)	Sound Level	Weight Pound (kg)	Length Inch (mm)
59033	Self-Gen	3-1/2 (89)	3/32 (2.5)	88 dB(A)	1.4 (.6)	8-1/2 (216)
59038	Self-Gen	5 (127)	3/32 (2.5)	86 dB(A)	1.5 (.6)	8-1/2 (216)
59043	Self-Gen	6 (152)	3/32 (2.5)	87 dB(A)	1.5 (.7)	9 (229)
59103	Self-Gen	3 (76)	3/8 (10)	88 dB(A)	1.5 (.7)	8-1/2 (216)
59108	Self-Gen	3 (76)	3/16 (5)	89 dB(A)	1.4 (.6)	8-1/2 (216)
59113	Self-Gen	3 (76)	3/32 (2.5)	88 dB(A)	1.4 (.6)	9 (229)
59004	Central	3-1/2 (89)	3/8 (10)	79 dB(A)	1.5 (.7)	7 (178)
59009	Central	5 (127)	3/8 (10)	83 dB(A)	1.5 (.7)	7-1/4 (184)
59014	Central	6 (152)	3/8 (10)	84 dB(A)	1.6 (.7)	7-3/4 (197)
59019	Central	3-1/2 (89)	3/16 (5)	81 dB(A)	1.4 (.6)	7 (178)
59024	Central	5 (127)	3/16 (5)	81 dB(A)	1.5 (.6)	7-1/4 (184)
59029	Central	6 (152)	3/16 (5)	83 dB(A)	1.6 (.7)	7-3/4 (197)
59034	Central	3-1/2 (89)	3/32 (2.5)	80 dB(A)	1.4 (.6)	7 (178)
59039	Central	5 (127)	3/32 (2.5)	81 dB(A)	1.4 (.6)	7-1/4 (184)
59044	Central	6 (152)	3/32 (2.5)	82 dB(A)	1.5 (.7)	7-3/4 (197)
59104	Central	3 (76)	3/8 (10)	79 dB(A)	1.5 (.6)	7 (178)
59109	Central	3 (76)	3/16 (5)	81 dB(A)	1.4 (.6)	7-1/4 (184)
59114	Central	3 (76)	3/32 (2.5)	81 dB(A)	1.4 (.6)	7-3/4 (197)

Additional Specifications: Motor .25 hp (186 W) • Motor 12,000 RPM • Pad Thread 5/16"-24 Male • Air Inlet Thread 1/4" NPT Hose I.D. Size 1/4" (6 mm) • Air Flow Rate 14 SCFM/396 L/Min • Height 3-1/2" (89 mm) • Air Pressure 90 PSIG (6.2 Bar) Sound Level is the pressure measurement according to the method outlined in ISO regulation ISO-15744

Drop-In Motors

- Allows quick and easy replacement.
- No motor adjustments needed.
- Repair time reduced by 90%!
- Follow maintenance procedures as described in tool's parts page.

Drop-In Motor for Dynorbital® Silver Supreme Sanders

Drop-In Motor for Dynorbital-Spirit® Sanders

Dynorbital® Silver Supreme

3" (76 mm) Dia. Models	3/8" Orbit Part No.	3/16" Orbit Part No.	3/32" Orbit Part No.
Single Motor	69450	69451	69452
Ten Pack	69467	69468	69469

3-1/2" (89 mm) Dia. Models	3/8" Orbit Part No.	3/16" Orbit Part No.	3/32" Orbit Part No.
Single Motor	69453	69454	69455
Ten Pack	69470	69471	69472

5" (127 mm) Dia. Models	3/8" Orbit Part No.	3/16" Orbit Part No.	3/32" Orbit Part No.
Single Motor	69456	69457	69458
Ten Pack	69473	69474	69475

6" (152 mm) Dia. Models	3/8" Orbit Part No.	3/16" Orbit Part No.	3/32" Orbit Part No.
Single Motor	69459	69460	69461
Ten Pack	69476	69477	69478

Dynorbital-Spirit®

3" (76 mm) & 3-1/2" (89 mm)	3/8" Orbit Part No.	3/16" Orbit Part No.	3/32" Orbit Part No.
Single Motor	59450	59451	59452
Ten Pack	59470	59471	59472
Ten Pack w/Repair Tools	59460	59461	59462

5" (127 mm) Dia. Models	3/8" Orbit Part No.	3/16" Orbit Part No.	3/32" Orbit Part No.
Single Motor	59453	59454	59455
Ten Pack	59473	59474	59475
Ten Pack w/Repair Tools	59463	59464	59465

6" (152 mm) Dia. Models	3/8" Orbit Part No.	3/16" Orbit Part No.	3/32" Orbit Part No.
Single Motor	59456	59457	59458
Ten Pack	59476	59477	59478
Ten Pack w/Repair Tools	59466	59467	59468

Vacuum Conversion Kits

- For use with Dynabrade "D3" Series Random Orbital Sanders.
- Pad diameter determines which kit is right for your tool.
- Conversion kit allows user to change tool into desired vacuum configuration.

Pad Diameter Inch (mm)	Converts Tool To	Kit Part Number
3-1/2 (89 mm)	Self-Generated Vac	57118
3-1/2 (89 mm)	Central Vacuum	57119
5 (127 mm)	Self-Generated Vac	57120
5 (127 mm)	Central Vacuum	57121
6 (152 mm)	Self-Generated Vac	57122
6 (152 mm)	Central Vacuum	57123

Vinyl-Face Random Orbital Sanding Pads

With Dynabrade's Exclusive Single-Piece Hub Design!

- Exclusive single-piece hub design reduces pad vibration and ensures smooth performance.
- PREMIUM URETHANE Sanding Pads are perfectly weight-mated to Dynabrade tools, for achieving consistent **swirl-free finishes.**

Ask for the ORANGE!

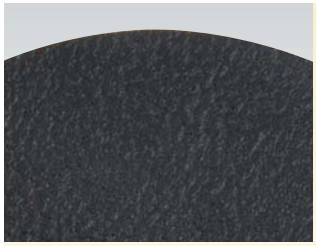

Vinyl-Face Pads

Ideal for PSA-type disc adhesion. Remove abrasive adhesive paper liner and press abrasive to vinyl-face sanding pad. Quick disc removal.

Non-Vacuum Pads

High quality backup pad. Weight-mated for smooth running and minimal tool vibration.

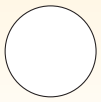

Vacuum Pads

Holes are precisely located to achieve proper alignment with abrasive discs for optimum vacuum capabilities.

Channel Vacuum Pads

1/8" (3 mm) deep recessed channel. No need to align vacuum holes to pad holes!

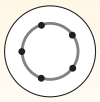

Non-Vacuum Pads

Pad Diameter	Part Number	Thickness	Density
3" (76 mm)*	56084	5/8" (16 mm)	Medium
	56086	5/8" (16 mm)	Soft
3-1/2" (89 mm)*	56097	5/8" (16 mm)	Soft
	56098	5/8" (16 mm)	Medium
5" (127 mm)	56102	3/8" (10 mm)	Soft
	56106	3/8" (10 mm)	Medium
	56175	5/8" (16 mm)	Medium
	56185	5/8" (16 mm)	Soft
	56273	1/2" (13 mm)	Extra Soft
6" (152 mm)	56103	3/8" (10 mm)	Soft
	56107	3/8" (10 mm)	Medium
	56177	5/8" (16 mm)	Medium
	56187	5/8" (16 mm)	Soft

All Pads: 13,000 RPM maximum operating speed; 5/16"-24 male thread.

***NOTE:** Our 3" (76 mm) and 3-1/2" (89 mm) pads, without holes, can also be used for vacuum sanding. Vacuum pick-up is around periphery of pad.

Vacuum Pads

Pad Diameter	Part Number	Holes	Thickness	Density
3" (76 mm)*	56084	0	5/8" (16 mm)	Medium
	56086	0	5/8" (16 mm)	Soft
3-1/2" (89 mm)*	56097	0	5/8" (16 mm)	Soft
	56098	0	5/8" (16 mm)	Medium
5" (127 mm)	56100	5	3/8" (10 mm)	Soft
	56104	5	3/8" (10 mm)	Medium
	56176	5	5/8" (16 mm)	Medium
	56186	5	5/8" (16 mm)	Soft
	56241	6	3/8" (10 mm)	Medium
	56274	5	1/2" (13 mm)	Extra Soft
6" (152 mm)	56101	6	3/8" (10 mm)	Soft
	56105	6	3/8" (10 mm)	Medium
	56178	6	5/8" (16 mm)	Medium
	56188	6	5/8" (16 mm)	Soft

All Pads: 13,000 RPM maximum operating speed; 5/16"-24 male thread.

***NOTE:** Our 3" (76 mm) and 3-1/2" (89 mm) pads, without holes, can also be used for vacuum sanding. Vacuum pick-up is around periphery of pad.

Dynabrade's Exclusive Single-Piece Hub Design

- All Dynabrade Sanding Pads feature our exclusive single-piece hub design, which reduces pad vibration and ensures smooth performance!
- Competitive pads have a hub assembled from three separate pieces, which can contribute to pad "wobbling" and uneven sanding - meaning lost time and lost profits!
- "Face Run-Out" of Dynabrade Pads measures only .002 - .005. Competitive pads measure as high as .015 - .040!

Channel Vacuum Pads

Pad Diameter	Part Number	Holes	Thickness	Density
5" (127 mm)	56251	5	3/8" (10 mm)	Soft
	56252	5	3/8" (10 mm)	Medium
	56254	5	5/8" (16 mm)	Medium
	56256	5	5/8" (16 mm)	Soft
6" (152 mm)	56261	6	3/8" (10 mm)	Soft
	56262	6	3/8" (10 mm)	Medium
	56264	6	5/8" (16 mm)	Medium
	56266	6	5/8" (16 mm)	Soft

Hook-Face Random Orbital Sanding Pads

With Dynabrade's Exclusive Single-Piece Hub Design!

- Exclusive single-piece hub design reduces pad vibration and ensures smooth performance.
- PREMIUM URETHANE Sanding Pads are perfectly weight-mated to Dynabrade tools, for achieving consistent **swirl-free finishes.**

Ask for the ORANGE!

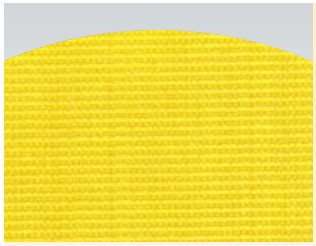

Hook-Face Pads

Short nap pads for use with reattachable discs.

Long nap pads for use with non-woven nylon discs.

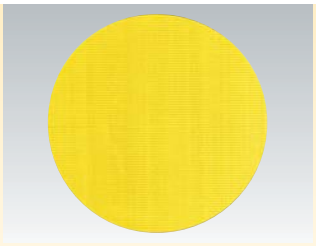

Non-Vacuum Pads

High quality backup pad. Weight-mated for smooth running and minimal tool vibration.

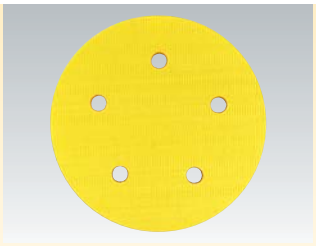

Vacuum Pads

Holes are precisely located to achieve proper alignment with abrasive discs for optimum vacuum capabilities.

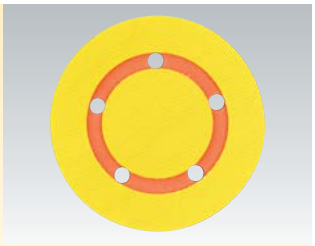

Channel Vacuum Pads

1/8" (3 mm) deep recessed channel. No need to align vacuum holes to pad holes!

Non-Vacuum Pads

Pad Diameter	Part Number	Thickness	Nap	Density
3" (76 mm)*	56087	5/8" (16 mm)	Short	Medium
	56090	5/8" (16 mm)	Long	Medium
	56145	1/2" (13 mm)	Short	Medium
3-1/2" (89 mm)*	54311	5/8" (16 mm)	Short	Soft
	54313	5/8" (16 mm)	Short	Hard
	54314	5/8" (16 mm)	Long	Medium
5" (127 mm)	54325	3/8" (10 mm)	Short	Medium
	56157	3/8" (10 mm)	Short	Soft
	56180	5/8" (16 mm)	Short	Medium
	56195	5/8" (16 mm)	Short	Soft
6" (152 mm)	54327	3/8" (10 mm)	Short	Medium
	56158	3/8" (10 mm)	Short	Soft
	56182	5/8" (16 mm)	Short	Medium
	56197	5/8" (16 mm)	Short	Soft

All Pads: 13,000 RPM maximum operating speed; 5/16"-24 male thread.

***NOTE:** Our 3" (76 mm) and 3-1/2" (89 mm) pads, without holes, can also be used for vacuum sanding. Vacuum pick-up is around periphery of pad.

6-Hole Vacuum Pad

Pad Diameter	Part Number	Holes	Thickness	Nap	Density
3" (76 mm)	56142	6	3/8" (10 mm)	Short	Medium

15-Hole Vacuum Pad*

Pad Diameter	Part Number	Holes	Thickness	Nap	Density
6" (152 mm)	54331	15	5/8" (16 mm)	Short	Medium
6" (152 mm)	56297	15	3/8" (10 mm)	Short	Medium

***NOTE:** This pad has unique "8+6+1" hole pattern.
It accepts 6" (152 mm) diameter abrasive discs with these hole patterns:

- **6-Hole**
- **6+1**
- **8+1**
- **8+6+1**
- **21-Hole**
- **Mesh or Multi-Hole**

Vacuum Pads

Pad Diameter	Part Number	Holes	Thickness	Nap	Density
3" (76 mm)*	56087	0	5/8" (16 mm)	Short	Medium
	56090	0	5/8" (16 mm)	Long	Medium
	56144	3	1/2" (13 mm)	Short	Medium
3-1/2" (89 mm)*	54311	0	5/8" (16 mm)	Short	Soft
	54313	0	5/8" (16 mm)	Short	Hard
	54314	0	5/8" (16 mm)	Long	Medium
5" (127 mm)	54326	5	3/8" (10 mm)	Short	Medium
	56155	5	3/8" (10 mm)	Short	Soft
	56181	5	5/8" (16 mm)	Short	Medium
	56196	5	5/8" (16 mm)	Short	Soft
	56240	6	3/8" (10 mm)	Short	Medium
	56320	44	3/8" (10 mm)	Short	Medium
6" (152 mm)	54328	6	3/8" (10 mm)	Short	Medium
	56156	6	3/8" (10 mm)	Short	Soft
	56183	6	5/8" (16 mm)	Short	Medium
	56198	6	5/8" (16 mm)	Short	Soft
	56321	52	3/8" (10 mm)	Short	Medium

All Pads: 13,000 RPM maximum operating speed; 5/16"-24 male thread.

***NOTE:** Our 3" (76 mm) and 3-1/2" (89 mm) pads, without holes, can also be used for vacuum sanding. Vacuum pick-up is around periphery of pad.

Channel Vacuum Pads

Pad Diameter	Part Number	Holes	Thickness	Nap	Density
5" (127 mm)	56250	5	3/8" (10 mm)	Short	Medium
	56253	5	3/8" (10 mm)	Short	Soft
	56255	5	5/8" (16 mm)	Short	Medium
	56257	5	5/8" (16 mm)	Short	Soft
6" (152 mm)	56260	6	3/8" (10 mm)	Short	Medium
	56263	6	3/8" (10 mm)	Short	Soft
	56265	6	5/8" (16 mm)	Short	Medium
	56267	6	5/8" (16 mm)	Short	Soft

Random Orbital Sander Abrasive Discs

DynaCut Aluminum Oxide Paper-Backed Coated Abrasive Discs

The most common mineral for general purpose applications. Ideal for sanding on bare wood, metal, plastic and fiberglass. Also used to prepare primed and painted surfaces for finishing.

			ALUMINUM OXIDE COATED ABRASIVES									
Diameter (Inches)	Attachment Type	Vacuum Type (No. of Holes)	36 Grit	40 Grit	60 Grit	80 Grit	120 Grit	150 Grit	180 Grit	220 Grit	320 Grit	Package Quantity
3	PSA	Vacuum (6)	•	•	•	93682	93683	93684	93685	93633	93634	50
3	Hook	Vacuum (6)	•	•	•	93665	93666	93667	93668	93636	93637	50
3	Hook	Non-Vacuum	•	•	92074	92075	92076	92077	92078	92079	92080	50
3	Hook	Vacuum (3)	•	•	92081	92056	92057	92082	92058	92059	92060	50
3-1/2	PSA	Non-Vacuum	•	•	•	79900	79901	79905	79902	79903	79904	Box/100 Pcs.
3-1/2	PSA	Non-Vacuum	•	•	•	79230	79231	79235	79232	79233	79234	**Roll/100 Pcs.**
3-1/2	Hook	Non-Vacuum	•	•	•	79935	79936	79906	79937	79938	79939	Box/100 Pcs.
5	PSA	Non-Vacuum	•	•	79967	79910	79911	79914	79912	79913	79907	Box/100 Pcs.
5	PSA	Non-Vacuum	•	•	•	79240	79241	79246	79242	79243	79981	**Roll/100 Pcs.**
5	PSA	Vacuum (5)	•	•	79968	79915	79916	79919	79917	79918	79908	Box/100 Pcs.
5	PSA	Vacuum (5)	•	•	•	79245	79247	79248	79249	79250	79982	**Roll/100 Pcs.**
5	Hook	Non-Vacuum	•	•	79969	79941	79942	79945	79943	79944	79909	Box/100 Pcs.
5	Hook	Vacuum (5)	•	•	79976	79946	79947	79950	79948	79949	79930	Box/100 Pcs.
5	Hook	Multi-Hole Vac	•	•	•	79961	79962	79963	79964	79965	79966	Box/100 Pcs.
6	PSA	Non-Vacuum	•	•	79977	79920	79921	79924	79922	79923	79931	Box/100 Pcs.
6	PSA	Non-Vacuum	•	•	•	79252	79254	79255	79256	79257	79983	**Roll/100 Pcs.**
6	PSA	Vacuum (6)	•	•	79978	79925	79926	79929	79927	79928	79932	Box/100 Pcs.
6	PSA	Vacuum (6)	•	•	•	79259	79261	79262	79263	79264	79984	**Roll/100 Pcs.**
6	Hook	Non-Vacuum	•	•	79979	79951	79952	79955	79953	79954	79933	Box/100 Pcs.
6	Hook	Vacuum (6)	•	•	79980	79956	79957	79960	79958	79959	79934	Box/100 Pcs.
6	Hook	Multi-Hole Vac	•	•	•	79970	79971	79972	79973	79974	79975	Box/100 Pcs.
8	PSA	Non-Vacuum	•	91235	91236	91237	91239	91240	91241	91242	91243	25
8	PSA	Vacuum (8)	•	91247	91248	91249	91251	91244	91245	91246	91248	25
8	Hook	Non-Vacuum	•	91444	91445	91446	91448	91250	91252	91253	91254	25
8	Hook	Vacuum (8)	•	91456	91457	91458	91460	91255	91256	91257	91258	25
11-1/4	Hook	Non-Vacuum	91315	•	91316	91300	91301	•	91302	•	•	10
11-1/4	Hook	Vacuum (O-Style)	91317	•	91318	91303	91304	•	91305	91306	•	10
11-1/4	Hook	Vacuum (5)	•	•	•	•	91309	•	•	•	•	10

DynaCut Aluminum Oxide Film-Backed Abrasive Discs

			ALUMINUM OXIDE COATED ABRASIVES											
Diameter (Inches)	Attachment Type	Vacuum Type	36 Grit	40 Grit	60 Grit	80 Grit	100 Grit	120 Grit	150 Grit	180 Grit	240 Grit	320 Grit	400 Grit	Package Quantity
5	PSA	Non-Vacuum	•	•	82454	82455	82456	82457	82458	82459	82460	82461	82462	Box/100 Pcs.
5	PSA	Vacuum (5)	•	•	82465	82466	82467	82468	82469	82470	82471	82472	82473	Box/100 Pcs.
5	Hook	Non-Vacuum	•	•	82427	82428	82429	82430	82431	82432	82434	82435	82436	Box/100 Pcs.
5	Hook	Vacuum (Multi-Hole)	•	•	79359	79360	79361	79362	79363	79364	79366	79367	79368	Box/100 Pcs.
6	PSA	Non-Vacuum	•	•	82476	82477	82478	82479	82480	82481	82482	82483	82484	Box/100 Pcs.
6	PSA	Vacuum (6)	•	•	82487	82488	82489	82490	82491	82492	82493	82494	82495	Box/100 Pcs.
6	Hook	Non-Vacuum	•	•	82442	82443	82444	82445	82446	82447	82449	82450	82451	Box/100 Pcs.
6	Hook	Vacuum (Multi-Hole)	•	•	79374	79375	79376	79377	79378	79379	79381	79382	79383	Box/100 Pcs.

• Call for availability and pricing.

Random Orbital Sander Abrasive Discs (Cont'd.)

Dynabrade Aluminum Oxide Microfinishing Discs

Diameter (Inches)	Attachment Type	Vacuum Type (No. of Holes)	100 Micron	80 Micron	60 Micron	30 Micron	15 Micron	Package Quantity
11-1/4	Hook	Non-Vacuum	91320	91321	91322	91323	91324	10
11-1/4	Hook	Vacuum (O-Style)	91325	91326	91327	91328	91329	10

Dynabrade Aluminum Oxide Clear Coat Repair Discs

Aluminum Oxide paper-backed discs ideal for spot repair and dust nib repair.

Diameter (Inches)	Attachment Type	Vacuum Type	5 Micron Grade	Package Quantity
1-1/4	PSA	Non-Vacuum	93193	500/Roll

DynaCut Silicon Carbide Coated Abrasive Discs

Silicon Carbide creates a thinner scratch pattern than Aluminum Oxide, due to its sharper grain.
Silcon Carbide cuts faster, but does not last as long as Aluminum Oxide.

			SILICON CARBIDE COATED ABRASIVES									
Diameter (Inches)	Attachment Type	Vacuum Type	36 Grit	40 Grit	60 Grit	80 Grit	120 Grit	150 Grit	180 Grit	220 Grit	320 Grit	Package Quantity
3/4	PSA	Non-Vacuum	•	•	•	78160	78161	•	78162	78163	•	Sheet/75 Pcs
1-1/4	PSA	Non-Vacuum	•	•	•	78165	78166	•	78167	78168	•	Sheet/25 Pcs

DynaCut Scalloped-Edge Aluminum Oxide Coated Abrasive Discs

Scalloped-Edge Discs (when paired with Dynabrade Radius Edge Pads) conform to the shape of coves and corners.
Ideal for use on backsplash corners, countertop coves, bowls, sinks, and rounded fiberglass corners.

			ALUMINUM OXIDE COATED ABRASIVES									
Diameter (Inches)	Attachment Type	Vacuum Type (No. of Holes)	80 Grit	100 Grit	120 Grit	100 Micron	80 Micron	60 Micron	30 Micron	15 Micron	9 Micron	Package Quantity
3-1/2	Hook	Non-Vacuum	92580	•	92581	92582	•	92583	92584	•	•	50
5	Hook	Non-Vacuum	92590	92597	92591	92592	92587	92593	92594	92588	92589	50
5	Hook	Vacuum (5)	92600	•	92601	92602	•	92603	92604	•	•	50

DynaBrite® Scalloped-Edge Non-Woven Nylon Surface Conditioning Discs

			SURFACE CONDITIONING (NWN)		
Diameter (Inches)	Attachment Type	Vacuum Type (No. of Holes)	Medium Maroon	Fine Gray	Package Quantity
3-1/2	Hook	Non-Vacuum	92585	92586	10
5	Hook	Non-Vacuum	92595	92596	10
5	Hook	Vacuum (5)	92605	92606	10

DynaBrite® Non-Woven Nylon Surface Conditioning Discs

Ideal for surface conditioning, decorative finishing,
light/heavy cleaning, blending and polishing.

			SURFACE CONDITIONING (NWN)			
Diameter (Inches)	Attachment Type	Vacuum Type	Coarse (Brown)	Medium (Maroon)	Very Fine (Blue)	Package Quantity
5	Hook	Non-Vacuum	78414	78415	78416	10
6	Hook	Non-Vacuum	78417	78418	78419	10
7	Hook	Non-Vacuum	78420	78421	78422	10

• Call for availability and pricing.

Random Orbital Sander Accessories

"Stays-Tight" Muffler Parts

- Replaceable parts that make up new "Stays-Tight" muffler system.
- Threaded cap keeps muffler firmly attached during use.

57065 Cone Muffler
(Dynorbital® Supreme Only)

56027
Muffler Insert

69359
Threaded Cap

Portable Self-Contained Dust Collection Systems

- For use with Dynabrade Self-Generated Vacuum tools.
- Systems include 1" (25 mm) dia. x 6' (1.8 m) long 50682 Flex-Hose.

Part No. 50617

- Includes 50683 Bag with hook-face closure.

Part No. 56303

- Includes 56304 Bag with zipper-lock closure.

50617

Ball-Swivel Plug

Plug "swivels" for great tool maneuverability!

Part No. 97016

- 97016 Ball-Swivel Plug offers 53º conical range of motion, for added tool maneuverability and operator comfort.
- A natural fit with Dynabrade palm-style Random Orbital Sanders!
- Ported plug design allows air flow of up to 74 SCFM (2,095 LPM).
- Maximum air pressure of 90 PSIG (6.2 Bar).

Electric Portable Vacuum System

- Heavy duty stainless steel drum; variable vacuum control.
- HEPA filtration (0.3 micron) with felt insert and paper bag.
- Electronic thermal protection device prevents heat overload of motor.
- Heavy duty four-wheel trolley with easy "tilt 'n clean" drum.

Model 61300

9.9 Gallon Capacity

- 120V (AC)

Model 61301

17 Gallon Capacity

- 120V (AC)

Portable Vacuums available in many other voltage formats.

61300

DYNABRADE®

Visit our Website for more Tools and Related Accessories
www.dynabrade.com

DYNABRADE, INC. • DYNABRADE INTERNATIONAL
8989 Sheridan Drive • Clarence, New York 14031-1419
Phone: (716) 631-0100 • US Fax: 716-631-2073 • Int'l Fax: 716-631-2524
US Consumers Call Toll-Free: 1-800-828-7333
Canadian Consumers Call Toll-Free: 1-800-344-1488

DYNABRADE EUROPE S.à r.l.
Zone Artisanale Op Tomm 6 • L-5485 Wormeldange—Haut, Luxembourg
Telephone: +352 768 494 1 • Fax: +352 768 495

DYNABRADE DO BRASIL
Rua Oneda, 632 • Sao Bernardo do Campo • SP - CEP 09895-280
Telephone 55-11-4390-0133 • Fax 55-11-4399-1067

DYNABRADE INDIA ABRASIVE POWER TOOLS Pvt Ltd.
EL-54, TTC Industrial Area, M.I.D.C. Mahape, Electronic Zone, Navi Mumbai - 400705
Maharashtra, India • Telephone: +91 22 2763 2226 • Fax: +91 22 2763 2228

Try Our U.S. Consumer Toll-Free Number 1-888 DYNABRADE (or 1-800-828-7333)

DISTRIBUTED BY:

DISTRIBUTED BY:
Pro Wood Finishes
14622 Southlawn Lane
Rockville MD 20850
Ph: (301) 424-3033

©DYNABRADE, INC., 2011
REV-11/11 PRINTED IN USA